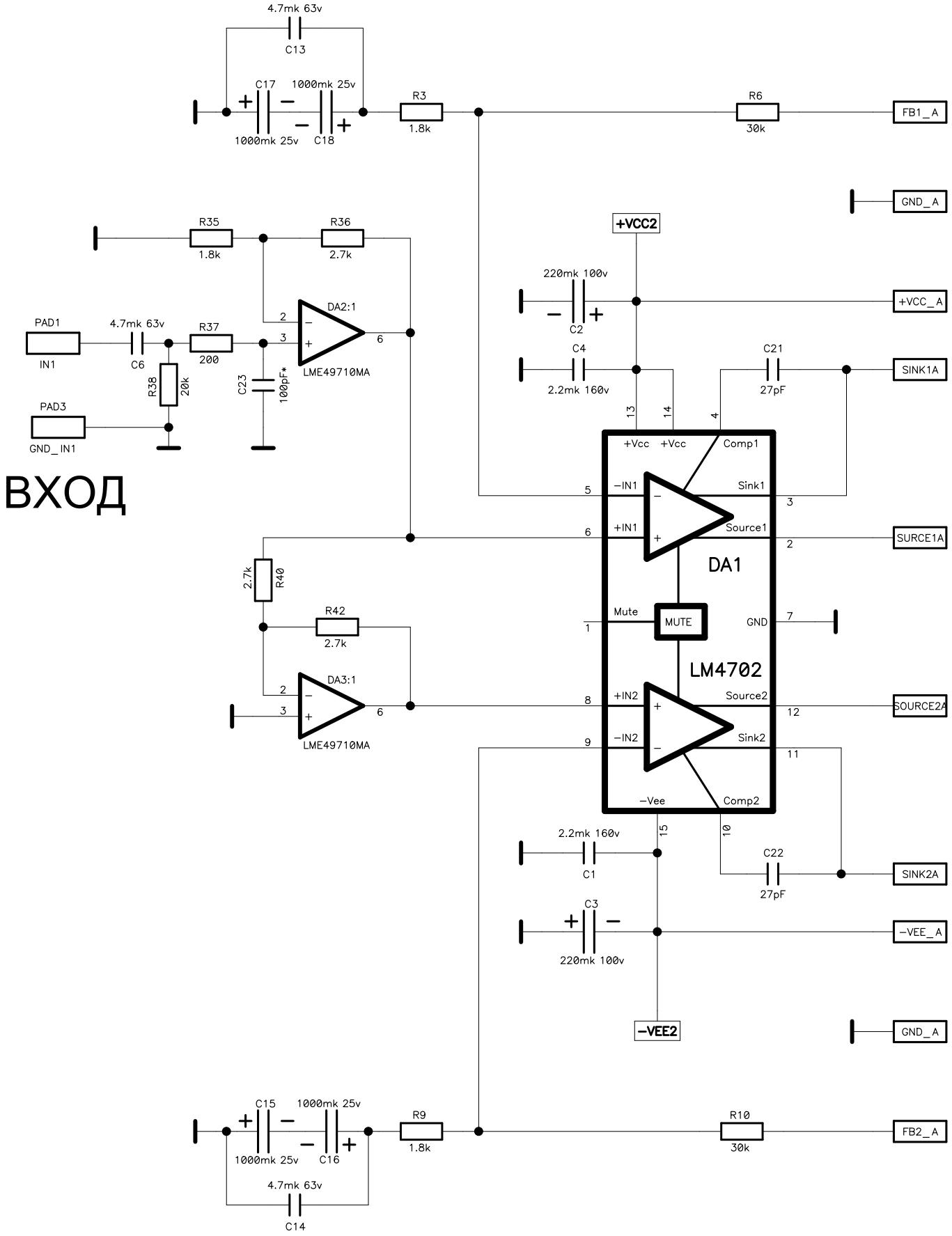
4.7mk 63v
C13
C17
1000mk 25v
1000mk 25v
C18
R3
1.8k
R6
30k
FB1_A
GND_A
R35
1.8k
R36
2.7k
+VCC2
220mk 100v
C2
+VCC_A
PAD1
IN1
4.7mk 63v
C6
R37
200
DA2:1
LME49710MA
R38
20k
C23
100pF*
PAD3
GND_IN1
C4
2.2mk 160v
C21
27pF
SINK1A
ВХОД
+Vcc
+Vcc
Comp1
−IN1
Sink1
+IN1
Source1
SURCE1A
DA1
2.7k
R40
R42
2.7k
Mute
MUTE
GND
LM4702
DA3:1
LME49710MA
+IN2
Source2
SOURCE2A
−IN2
Sink2
−Vee
Comp2
2.2mk 160v
C1
C22
27pF
SINK2A
C3
220mk 100v
−VEE_A
−VEE2
GND_A
C15
1000mk 25v
1000mk 25v
C16
R9
1.8k
R10
30k
FB2_A
4.7mk 63v
C14